CAD FILE:

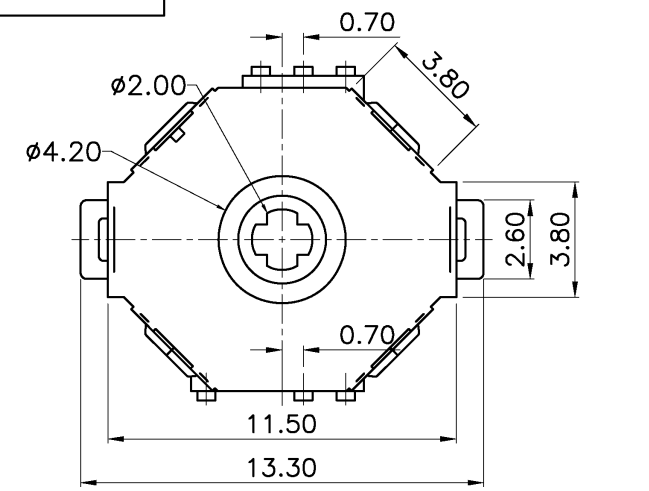

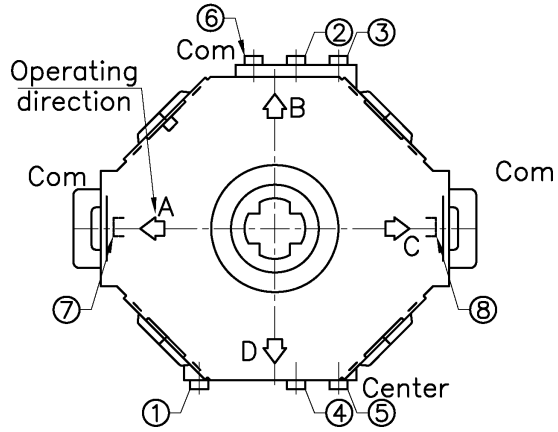

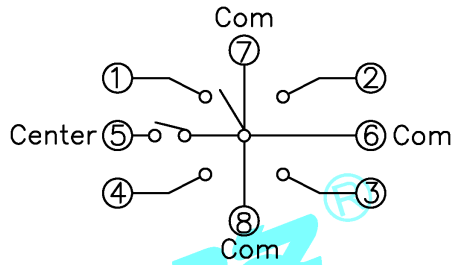

Circuit Diagram

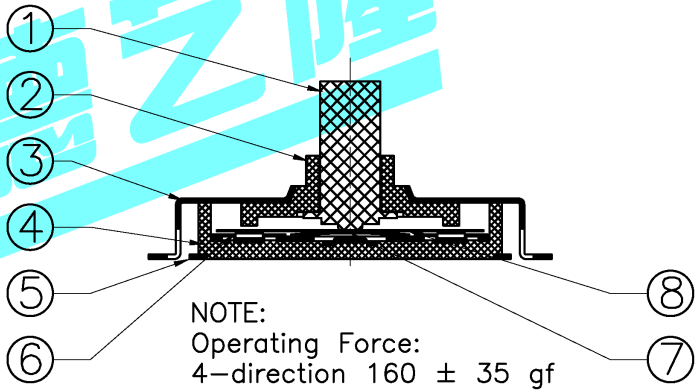

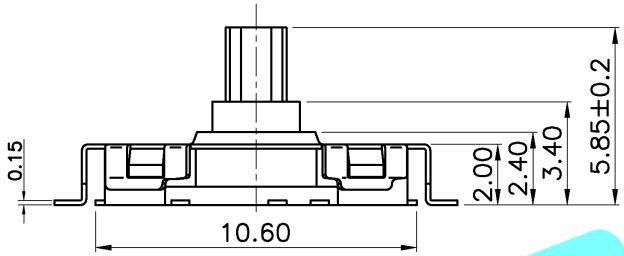

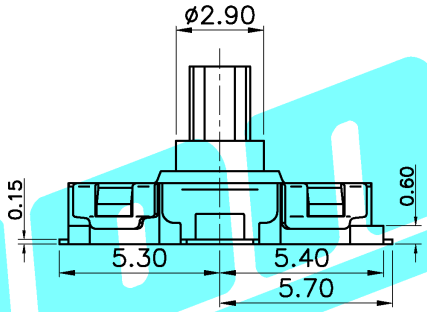

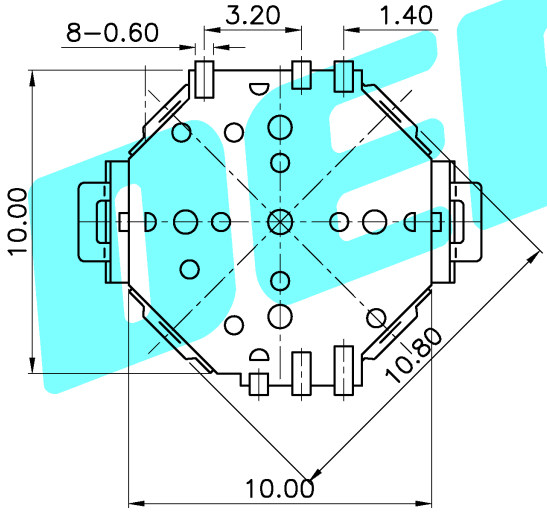

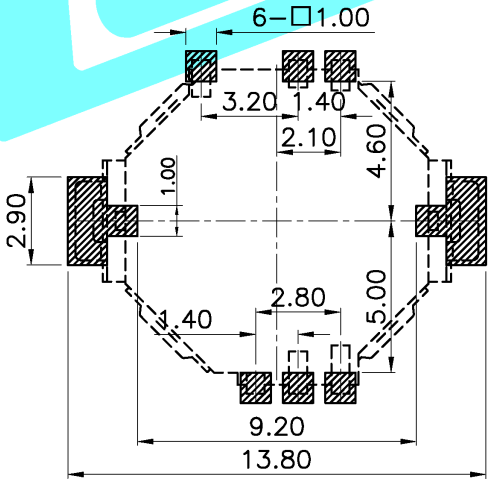

PCB Layout(Pattern Side)

NOTE:
Operating Force:
4–direction 160 ± 35 gf
center push 250 ± 35 gf
Travel:4–direction 0.25±0.1mm
center push 0.25±0.1mm

ITEM	PART NAME	QTY.	MATERIAL	FINISHING
⑧	Dust cover	1	Kapton film	Yellow
⑦	Contact 2	1	F.Ag/SUS	———
⑥	Contact 1	4	F.Ag/SUS	———
⑤	Terminal	8	Brass(0.15t)	Plating silver
④	Base	1	LCP	Black
③	Cover	1	LCP	Black
②	Axle sleeve	1	LCP	Off–white
①	Keystoke	1	PA46	Black

———	A	———	NEW	———	———	———
ECN NO.	REV.	DATE.	DESCRIPTION.	CHANGE.	CHECK.	APPRO.

APPROVALS		DATE
DRAWN	G.M.Chen	2015/3/30
CHECKED		
APPROVALS		

TOLERANCES ARE: 30~以上 ±0.30; 10~30 ±0.20; 5~10 ±0.15; ~ 5 ±0.10; ANGLE ±2°

DEALON 德艺隆® ELECTRONICS CO.,LTD

TITLE: MULTIFUNCTIONAL SWITCHS

PART NO. BLQ–1510–01

UNIT: mm | SCALE: 1:1 | SHEET 1 OF 1

DRAWING NO. ——— | PROJ: