CAD FILE:

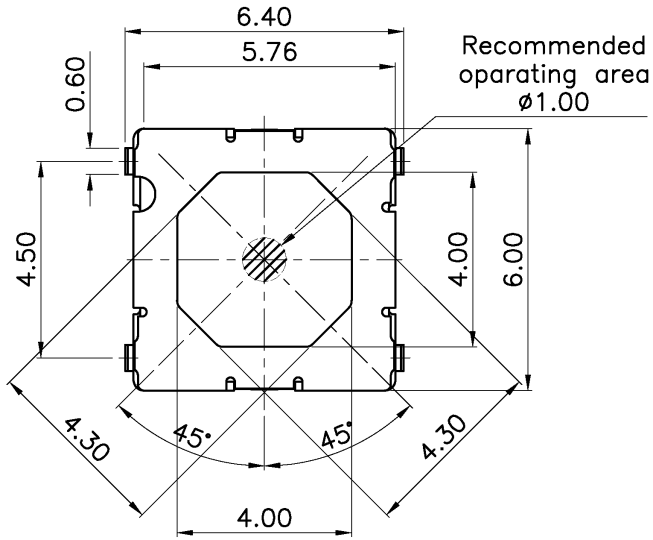

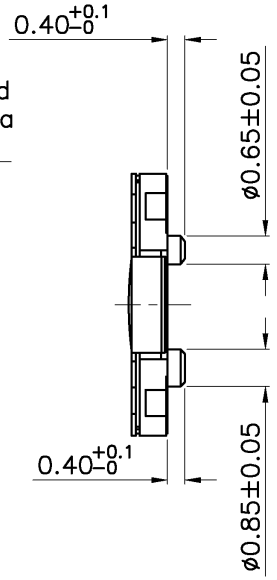

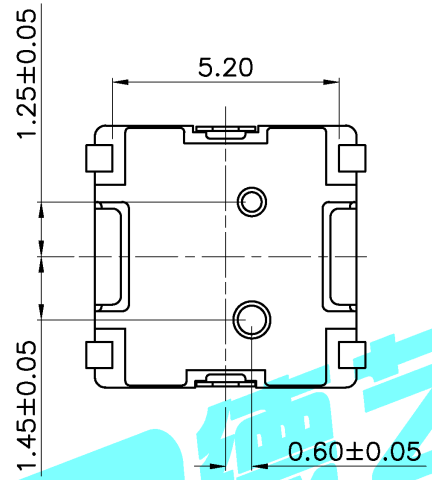

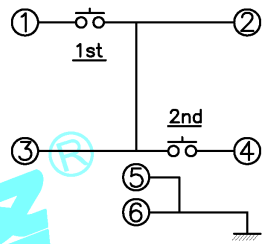

Circuit Diagram

Note:
1.Opercting force: 1st 100±40gf
2st 250±80gf
2.Travel:1st 0.25±0.1mm
2st 0.40±0.1mm

NO.1	
PART NO	NOTE
1~9	SERIAL NUMBER

NO.2	
PART NO	NOTE
B	Bulk
R	Tape&Reel

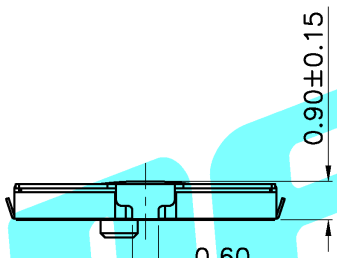

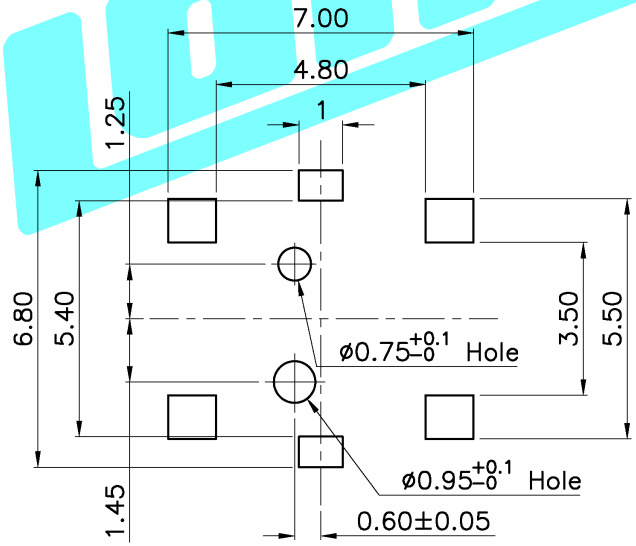

PCB Layout(Pattern side)

ITEM	PART NAME	QTY.	MATERIAL	FINISHING
⑤	Dust Cover	1	Kapton Film	Yellow
④	Terminal	4	Phosphor Bronze	Plating silver
③	Contact	2	F.Ag/SUS	Plating silver
②	Base	1	LCP	Black
①	Cover	1	SUS	Natural

———	A	———	NEW	———	———	———	
ECN NO.	REV.	DATE.	DESCRIPTION.	CHANGE.	CHECK.	APPRO.	

APPROVALS		DATE
DRAWN	G.M.Chen	2015/6/10
CHECKED		
APPROVALS		

TOLERANCES ARE: 30~以上 ±0.30; 10~30 ±0.20; 5~10 ±0.15; ~ 5 ±0.10; ANGLE ±2°

DEALON德艺隆® ELECTRONICS CO.,LTD

TITLE: TACT SWITCHES

PART NO. TD-1200SM-A5N-DXX

UNIT: mm | SCALE: 1:1 | SHEET 1 OF 1

DRAWING NO. ——— | PROJ: