CAD FILE:

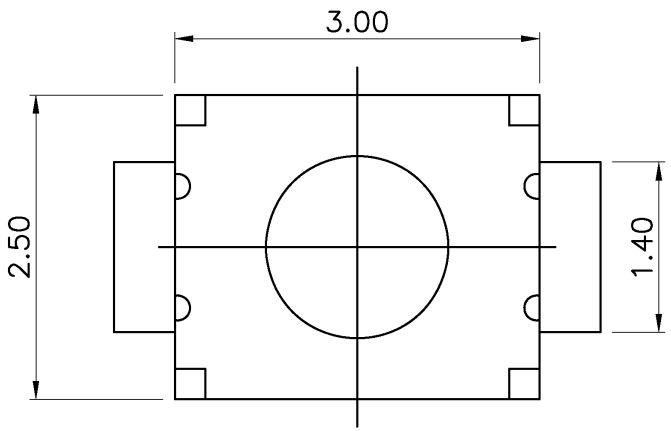


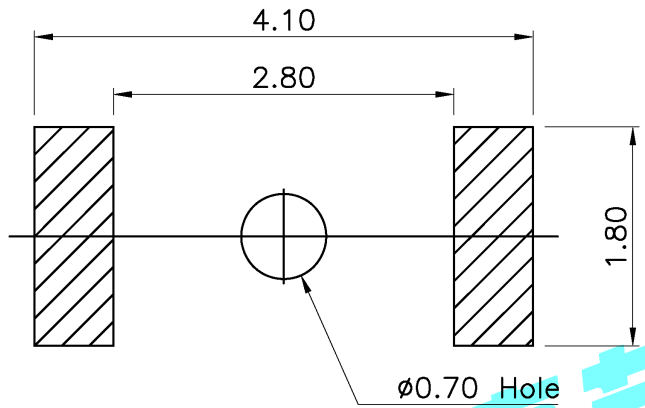


PCB Layout

| NO.1 | |
|---|---|
| PART NO | H |
| A | 1.5 |
| B | 1.7 |

| NO.2 | |
|---|---|
| PART NO | vigor |
| 1 | 70±30 |
| 2 | 100±50 |
| 3 | 160±50 |
| 4 | 260±50 |
| 5 | 320±80 |
| 6 | 350±80 |
| 7 | 520±130 |

| NO.3 | |
|---|---|
| PART NO | MATERIAL/QTY |
| S | SUS/1PC |
| D | SUS/2PCS |

| NO.4 | |
|---|---|
| PART NO | NOTE |
| 1~9 | SERIAL NUMBER |

| NO.5 | |
|---|---|
| PART NO | NOTE |
| B | Bulk |
| R | Tape&Reel |

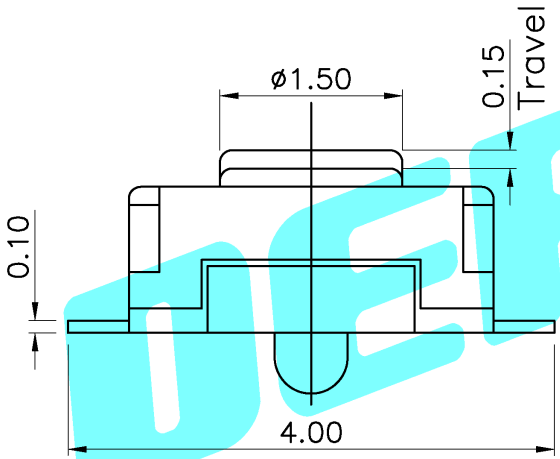


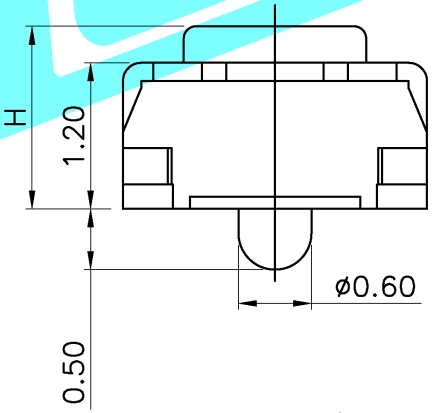


| PART NO. |
|---|
| TD-1183SA |
| TD-1183SN |

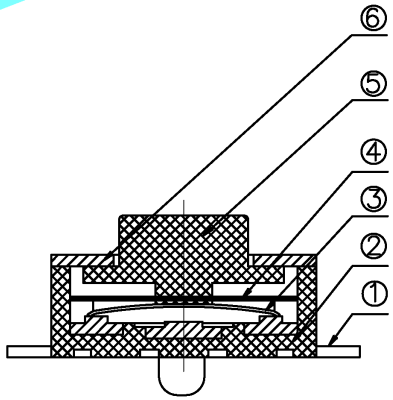


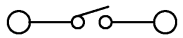

Circuit Diagram

| ITEM | PART NAME | QTY. | MATERIAL | FINISHING |
|---|---|---|---|---|
| ⑥ | Cover | 1 | SUS | Natural |
| ⑤ | Knob | 1 | LCP | Black |
| ④ | Dust Cover | 1 | Kapton Film | Yellow |
| ③ | Contact | 1 | SUS | Plating silver |
| ② | Base | 1 | LCP | Black |
| ① | Terminal | 2 | Phosphor Bronze | Plating silver |

| APPROVALS | | DATE |
|---|---|---|
| DRAWN | G.M.Chen | 2015/5/19 |
| CHECKED | | |
| APPROVALS | | |

DEALON德艺隆® ELECTRONICS CO.,LTD

TITLE: TACT SWITCHES

PART NO. TD-1183SA-XXN-XXX

UNIT: mm SCALE: 1:1 SHEET 1 OF 1

DRAWING NO. ——— PROJ.

TOLERANCES ARE: 30~以上 ±0.30; 10~30 ±0.20; 5~10 ±0.15; ~5 ±0.10; ANGLE ±2°

| ECN NO. | REV. | DATE. | DESCRIPTION. | CHANGE. | CHECK. | APPRO. |
|---|---|---|---|---|---|---|
| ——— | A | ——— | NEW | ——— | ——— | ——— |

DEALON德艺隆®