CAD FILE:

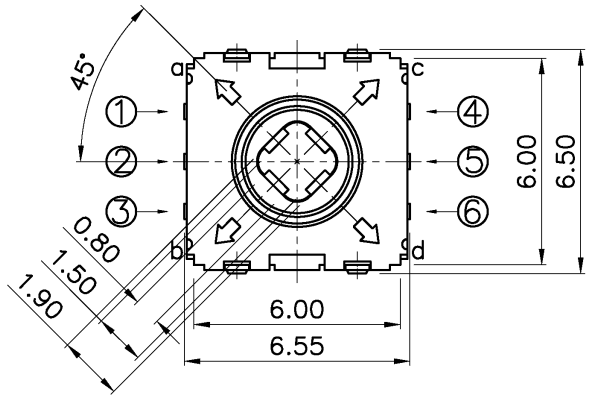

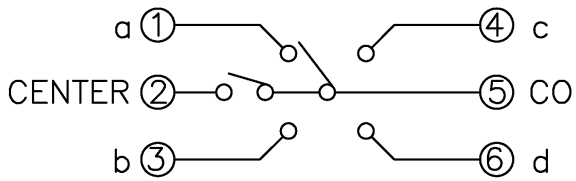

Circuit Diagram

NOTE:
Operating Force:
lever portion 160 ± 35 gf
Push portion 250 ± 35 gf

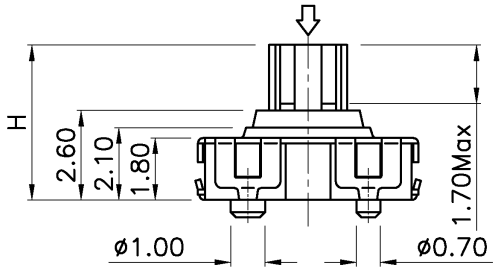

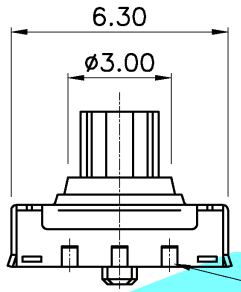

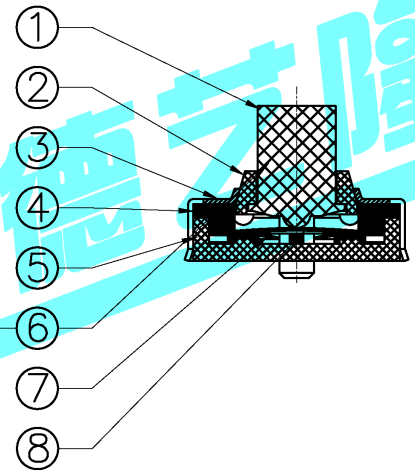

H	PART NO.
4.5	BLQ−1507−01
5.0	BLQ−1507−02

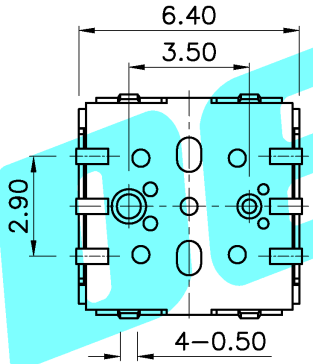

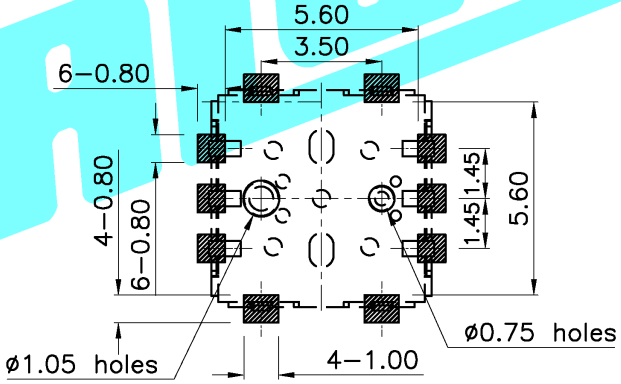

PCB Layout(Pattern Side)

ITEM	PART NAME	QTY.	MATERIAL	FINISHING
⑧	Contact 2	1	F.Ag/SUS/ø3.5	Natural
⑦	Contact 1	4	F.Ag/SUS/ø2.4	Natural
⑥	Terminal	6	Brass(0.15t)	Plating silver
⑤	Base	1	LCP	Black
④	Gasket	1	LCP	Black
③	Cover	1	Brass(0.15t)	Plating silver
②	Axle sleeve	1	LCP	Ivory Tint
①	Keystoke	1	PA46	Black

APPROVALS		DATE
DRAWN	G.M.Chen	2015/3/30
CHECKED		
APPROVALS		

DERLON 德艺隆® ELECTRONICS CO.,LTD

TITLE: MULTIFUNCTIONAL SWITCHS

PART NO. BLQ−1507−01

UNIT: mm SCALE: 1:1 SHEET 1 OF 1

DRAWING NO. ——— PROJ:

TOLERANCES ARE: 30~以上 ±0.30; 10~30 ±0.20; 5~10 ±0.15; ~ 5 ±0.10; ANGLE ±2°

ECN NO.	REV.	DATE.	DESCRIPTION.	CHANGE.	CHECK.	APPRO.
———	A	———	NEW	———	———	———