CAD FILE:

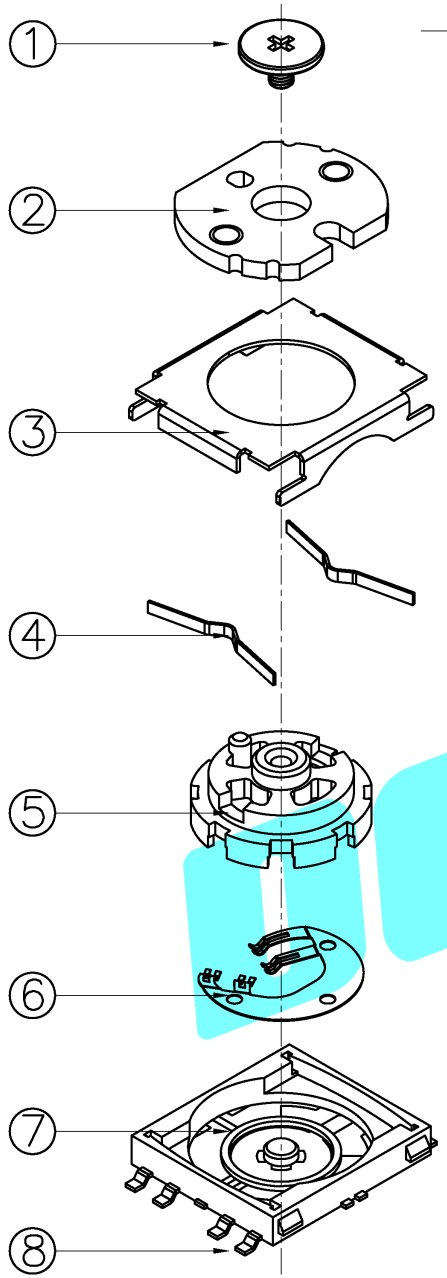

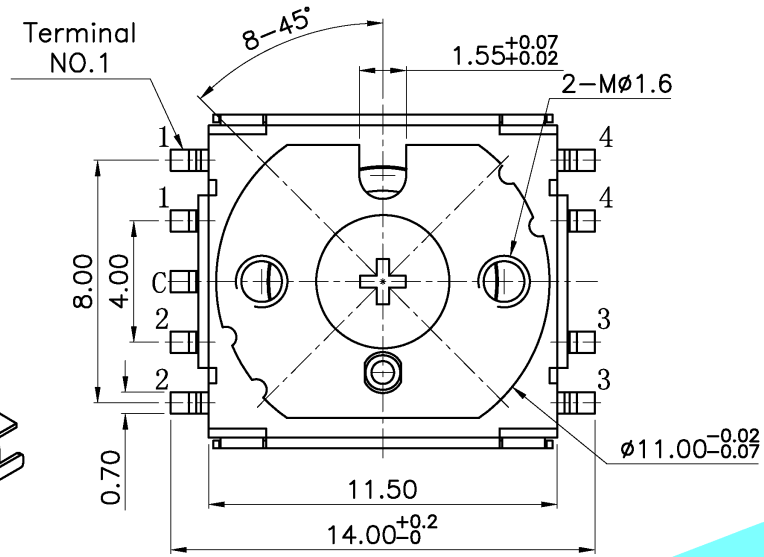

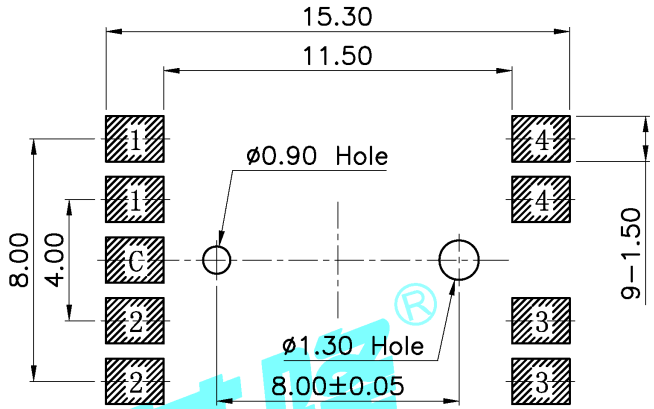

PCB Layout(Pattern Side)

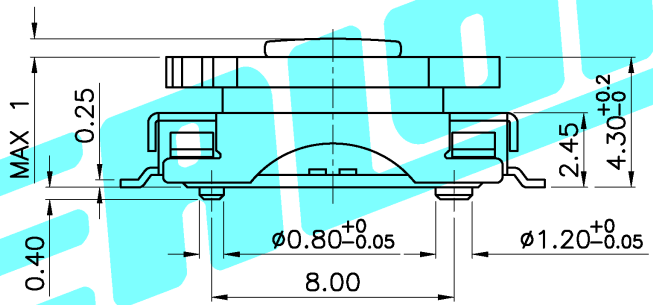

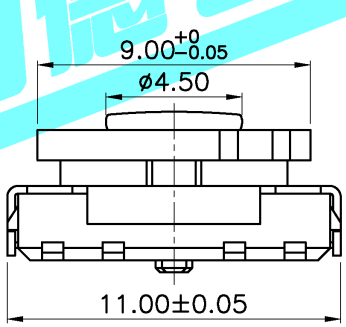

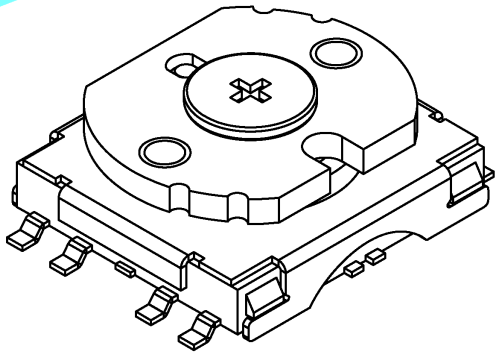

Terminal	Direction							
	1	2	3	4	5	6	7	8
C1					●	●		
C2	●							●
C3	●	●	●					
C4			●	●	●			

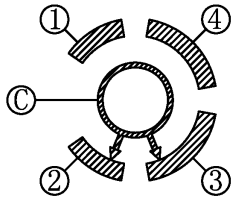

Circuit Diagram

NOTE:
Operating Force:200±20gf

ITEM	PART NAME	QTY.	MATERIAL	FINISHING
⑧	Terminal	9	Brass(0.25t)	Plating silver
⑦	Base	1	PPA	Brown
⑥	Contact	1	Brass	Plating silver
⑤	Knob	1	PP66	Black
④	Spring Plate	1	SUS	Natural
③	Cover	1	SUS	Natural
②	Locking Plate	1	SECC	Plating Nickel
①	Bolt	1	H62	Plating Nickel

ECN NO.	REV.	DATE.	DESCRIPTION.	CHANGE.	CHECK.	APPRO.	
	A		NEW				

APPROVALS		DATE
DRAWN	G.M.Chen	2015/3/30
CHECKED		
APPROVALS		

TOLERANCES ARE: 30~以上 ±0.30; 10~30 ±0.20; 5~10 ±0.15; ~5 ±0.10; ANGLE ±2°

DEALON德艺隆® ELECTRONICS CO.,LTD

TITLE: MULTIFUNCTIONAL SWITCHS

PART NO. BLQ-1530-01

UNIT: mm | SCALE: 1:1 | SHEET 1 OF 1

DRAWING NO. ——— | PROJ:

DEALON德艺隆®