CAD FILE:

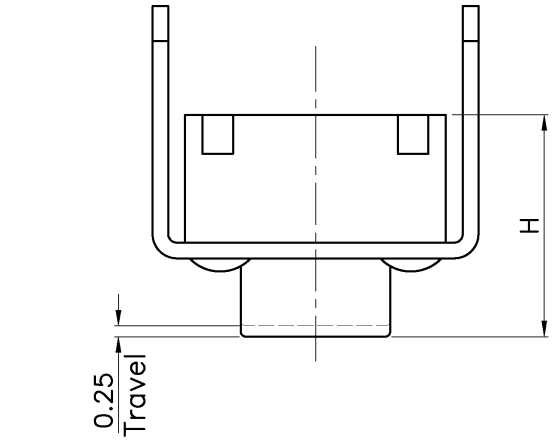

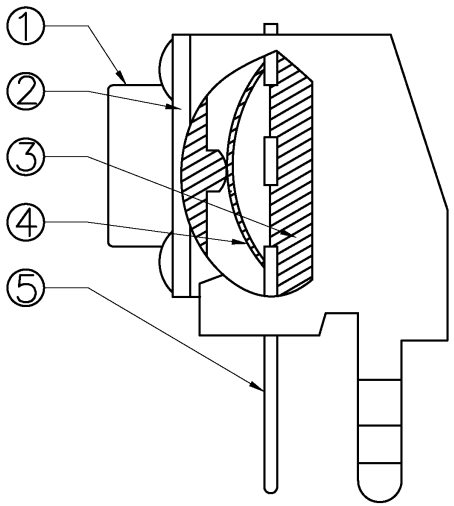

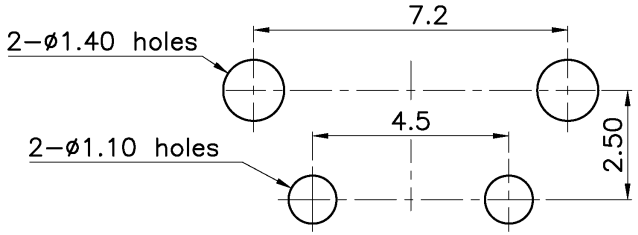

PCB Layout(Pattern side)

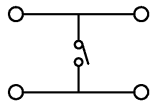

Circuit Diagram

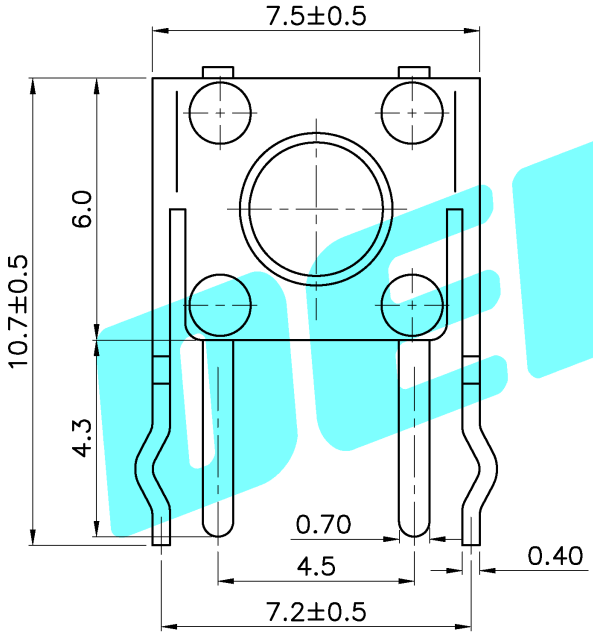

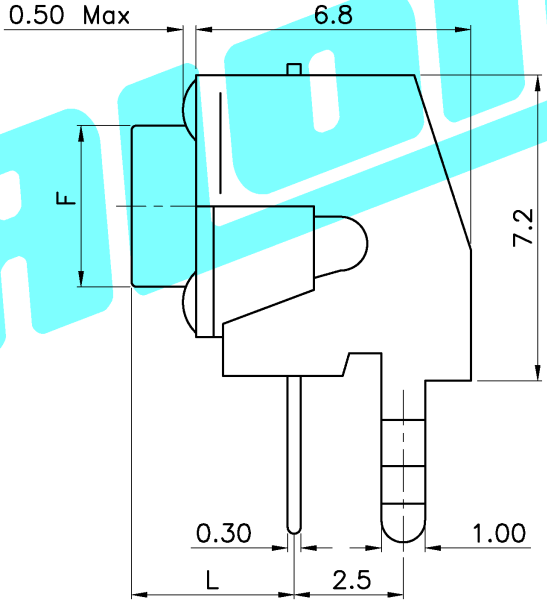

NO.1			
PART NO	H	L	F
A	4.3	3.15	ø3.40
B	4.5	3.25	ø3.40
C	5	3.85	ø3.40
E	6	4.85	ø3.40
G	7	5.85	ø3.20
I	8	6.85	ø3.00
K	9	7.85	ø3.00
L	9.5	8.35	ø3.00

NO.2	
PART NO	vigor
1	70±30
2	100±50
3	160±50
4	260±50
5	320±80
6	350±80
7	520±130

NO.3	
PART NO	MATERIAL/QTY
S	SUS/1PC
C	C5210/1PC
D	SUS/2PCS
E	C5210/2PCS

NO.4	
PART NO	NOTE
1~9	SERIAL NUMBER

NO.5	
PART NO	NOTE
B	Bulk
R	Tape&Reel

ITEM	PART NAME	QTY.	MATERIAL	FINISHING
⑤	Terminal	4	Brass(0.30t)	Plating silver
④	Contact	1	F.Ag/SUS	———
③	Base	1	Nylon	Black
②	Cover	1	SPCC	Plating Nickel
①	Keystoke	1	PA46	Black

———	A	———	NEW	———	———	———
ECN NO.	REV.	DATE.	DESCRIPTION.	CHANGE.	CHECK.	APPRO.

APPROVALS		DATE
DRAWN	G.M.Chen	2014/12/25
CHECKED		
APPROVALS		

TOLERANCES ARE: 30~以上 ±0.30; 10~30 ±0.20; 5~10 ±0.15; ~ 5 ±0.10; ANGLE ±2°

DEALON德艺隆® ELECTRONICS CO.,LTD

TITLE: TACT SWITCHES

PART NO. TC-1105AH-XXN-XXX

UNIT: mm | SCALE: 1:1 | SHEET 1 OF 1

DRAWING NO. ——— | PROJ:

DEALON德艺隆®